DS-2CD1023G0E-I
2 MP Fixed Bullet Network Camera

- High quality imaging with 2 MP resolution
- Efficient H.265+ compression technology
- Clear imaging against strong back light due to DWDR technology
- Water and dust resistant (IP67)
- EXIR 2.0: advanced infrared technology with long IR range

▪ Specification

Camera	
Image Sensor	1/2.7" Progressive Scan CMOS
Min. Illumination	Color: 0.01 Lux @(F2.0, AGC ON), B/W: 0 Lux with IR
Shutter Speed	1/3 s to 1/100, 000 s
Slow Shutter	Yes
Wide Dynamic Range	Digital WDR
Day & Night	IR cut filter
Angle Adjustment	Pan: 0° to 360°, tilt: 0° to 180°, rotate: 0° to 360°
Lens	
Focal Length & FOV	2.8 mm, horizontal FOV 112.1°, vertical FOV 60.0°, diagonal FOV 132.2° 4 mm, horizontal FOV 90.2°, vertical FOV 48.6°, diagonal FOV 107.6°
Lens Mount	M12
Focus	Fixed
Aperture	F2.0
Illuminator	
IR Wavelength	850 nm
IR Range	Up to 30 m
Video	
Max. Resolution	1920 × 1080
Main Stream	50 Hz: 25 fps (1920 × 1080, 1280 × 720) 60 Hz: 30 fps (1920 × 1080, 1280 × 720)
Sub-Stream	50 Hz: 25 fps (640 × 480, 640 × 360) 60 Hz: 30 fps (640 × 480, 640 × 360)
Video Compression	Main Stream: H.265/H.264 Sub-Stream: H.265/H.264/MJPEG
Video Bit Rate	32 Kbps to 8 Mbps
H.264 Type	Baseline Profile/Main Profile/High Profile
H.265 Type	Main Profile
H.264+	Main Stream supports
H.265+	Main Stream supports
Region of Interest (ROI)	1 fixed region for main stream
Network	
Protocols	TCP/IP, ICMP, HTTP, HTTPS, FTP, DHCP, DNS, DDNS, RTP, RTSP, RTCP, NTP, UPnP™, SMTP, IGMP, 802.1X, QoS, IPv6, Bonjour, IPv4, UDP, SSL/TLS
Simultaneous Live View	Up to 6 channels
API	Open Network Video Interface, ISAPI
User/Host	Up to 32 users. 3 levels: administrator, operator and user
Client	iVMS-4200, Hik-Connect
Web Browser	Plug-in required live view: IE 10+ Plug-in free live view: Chrome 57.0+, Firefox 52.0+ Local service: Chrome 57.0+, Firefox 52.0+
Image	
Image Settings	Saturation, brightness, contrast, sharpness, AGC, white balance adjustable by client software or web browser.

Day/Night Switch	Day, Night, Auto, Schedule
Image Enhancement	BLC, 3D DNR
Interface	
Ethernet Interface	1 RJ45 10 M/100 M self-adaptive Ethernet port
Event	
Basic Event	Motion detection, video tampering alarm, exception
General	
Linkage Method	Upload to FTP, notify surveillance center, send email
Camera Material	Metal & Plastic
Camera Dimension	177.6 mm × 66.2 mm × 67.8 mm (7.0" × 2.6" × 2.7")
Package Dimension	216 mm × 121 mm × 118 mm (8.5" × 4.8" × 4.6")
Camera Weight	Approx. 270 g (0.6 lb.)
With Package Weight	Approx. 490 g (1.1 lb.)
Storage Conditions	-30 °C to 60 °C (-22 °F to 140 °F). Humidity: 95% or less (non-condensing)
Startup and Operating Conditions	-30 °C to 60 °C (-22 °F to 140 °F). Humidity: 95% or less (non-condensing)
Web Client Language	English, Ukrainian
General Function	Anti-flicker, heartbeat, mirror, password protection, privacy mask, watermark, IP address filter
Firmware Version	V5.5.120
Power Consumption and Current	12 VDC, 0.4 A, max. 5 W PoE: (802.3af, 36 V to 57 V), 0.2 A to 0.15 A, max. 6.5 W
Power Supply	12 VDC ± 25% PoE: 802.3af, Class 3
Power Interface	Ø5.5 mm coaxial power plug
Approval	
EMC	FCC SDoC (47 CFR Part 15, Subpart B); CE-EMC (EN 55032: 2015, EN 61000-3-2: 2014, EN 61000-3-3: 2013, EN 50130-4: 2011 +A1: 2014); RCM (AS/NZS CISPR 32: 2015); IC VoC (ICES-003: Issue 6, 2016); KC (KN 32: 2015, KN 35: 2015)
Safety	UL (UL 60950-1); CB (IEC 60950-1:2005 + Am 1:2009 + Am 2:2013, IEC 62368-1:2014); CE-LVD (EN 60950-1:2005 + Am 1:2009 + Am 2:2013, IEC 62368-1:2014); BIS (IS 13252(Part 1):2010+A1:2013+A2:2015)
Environment	CE-RoHS (2011/65/EU); WEEE (2012/19/EU); Reach (Regulation (EC) No 1907/2006)
Protection	IP67 (IEC 60529-2013)

▪ Available Model

DS-2CD1023G0E-I(2.8/4 mm)

Typical Application

Hikvision products are classified into three levels according to their anti-corrosion performance. Refer to the following description to choose for your using environment.

This model has NO SPECIFIC PROTECTION.

Level	Description
Top-level protection	Hikvision products at this level are equipped for use in areas where professional anti-corrosion protection is a must. Typical application scenarios include coastlines, docks, chemical plants, and more.
Moderate protection	Hikvision products at this level are equipped for use in areas with moderate anti-corrosion demands. Typical application scenarios include coastal areas about 2 kilometers (1.24 miles) away from coastlines, as well as areas affected by acid rain.
No specific protection	Hikvision products at this level are equipped for use in areas where no specific anti-corrosion protection is needed.

▪ Dimension

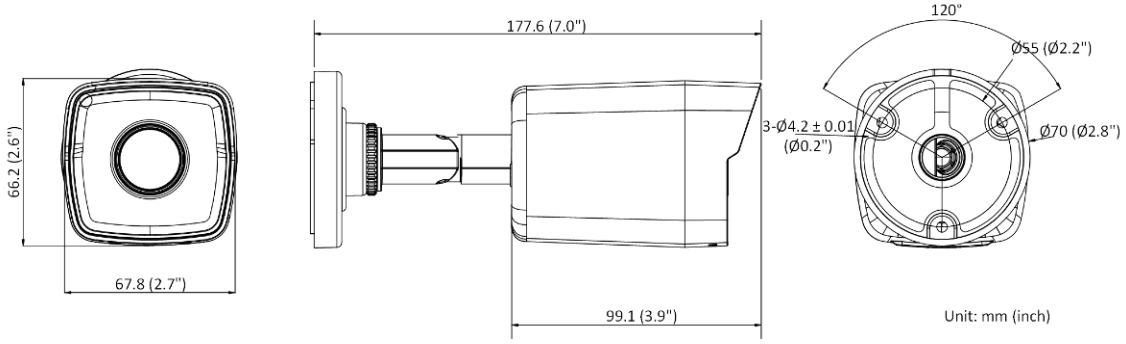

▪ Accessory

▪ Optional

DS-1280ZJ-XS Junction Box

Distributed by

Headquarters
No.555 Qianmo Road, Binjiang District,
Hangzhou 310051, China
T +86-571-8807-5998
overseasbusiness@hikvision.com

© Hikvision Digital Technology Co., Ltd. 2020 | Data subject to change without notice |

050512020211223